RUGGED MONITORING

MONITORING SIMPLIFIED

CTCLAMP

Clamp-On-Current Transformer

RUGGED | ROBUST | RELIABLE

CTCLAMP-D19 SERIES

Split-core current transformer for the measurement of AC currents from 1 to 200Amps. The Clamp-On CT easily snaps around the conductor and ideal for installation on electrical wiring. It has output in voltage form, 0.333V that is proportional to the RMS value of the primary current.

Benefits

- High isolation between primary and secondary circuits
- Compact design, Plug and Play
- Cost-Effective Solution for variety of applications
- High accuracy and durable
- UL Recognized
- CE and RoHS complaint

Applications

Transformer Monitoring
Current measurement for Transformer Load current, Fan Motor Current, Pump Motor Current, OLTC Motor Current

Switchgear/Breaker Monitoring
Current measurement for Phase Current, Motor Current, Heater Current (AC)

Automation and Control
Current measurement for protection systems

Technical Specifications

Input Current	1 Amp to 200 Amp
Input Current Frequency	50 Hz to 400 Hz
Output at rated current	0.333 Volt AC
Accuracy	± 1% (at 10% to 130% of rated current)t
Phase angle	< 2 degrees measured at 50% rated current
Operating Temperature	-20 °C to + 85 °C
Storage Temperature	-20 °C to + 85 °C
Protection Degree	IP40
Sensor Cable Length	2m Twisted Pair (Default). Longer cables available on demand

Available Options

Model #	Measuring Current Rating (Conductor)
CLCLAMP-19-5A	Up to 5Amp
CLCLAMP-19-10A	Up to 10 Amp
CLCLAMP-19-30A	Up to 30 Amp
CLCLAMP-19-50A	Up to 50 Amp
CLCLAMP-19-70A	Up to 70 Amp
CLCLAMP-19-100A	Up to 100 Amp
CLCLAMP-19-150A	Up to 150 Amp
CLCLAMP-19-200A	Up to 200 Amp

Drawing and Dimensions

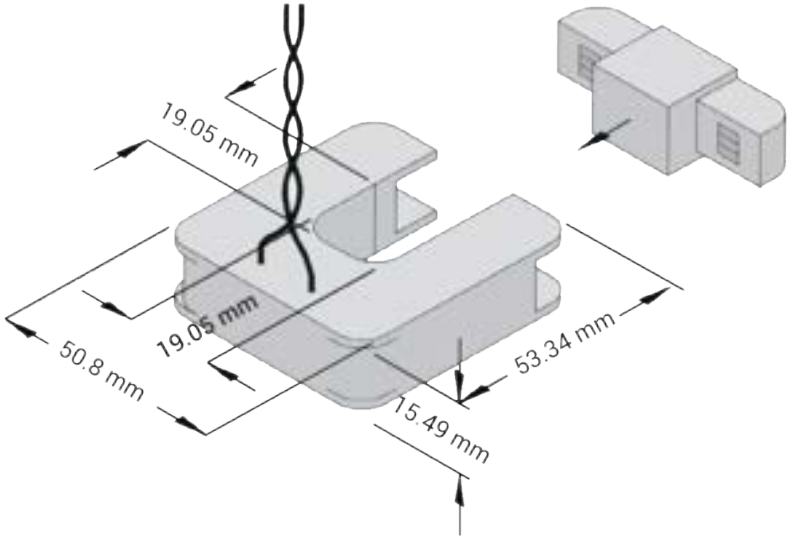

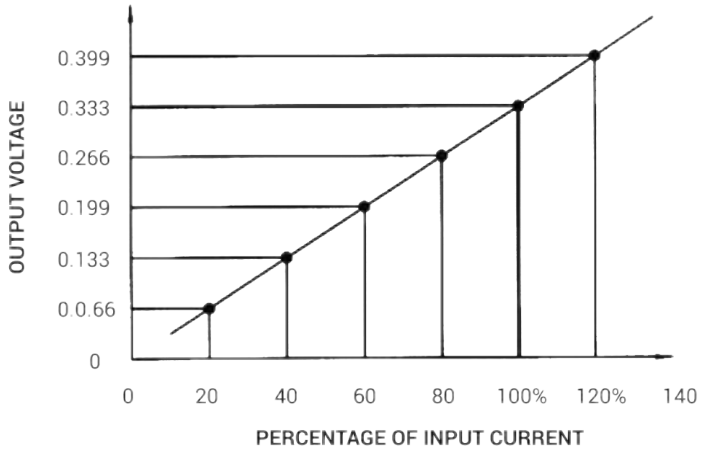

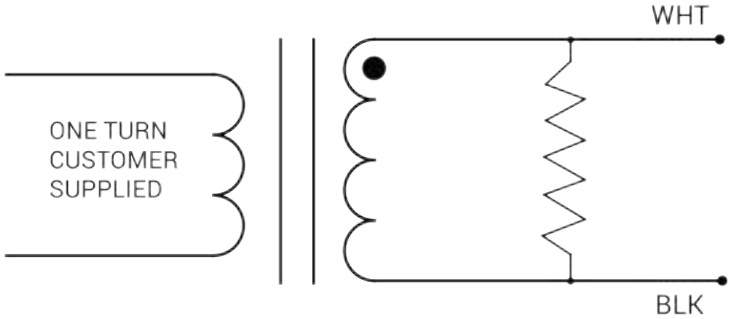

CERTIFICATIONS

ISO 9001:2015 ISO 14001:2015 ISO 45001:2018

Canada

1415 Frank-Carrel, Sulte , 230, Quebec, QC-G1N , 4N7, CANADA

Asia Pacific | China | India | Middle East & Africa | Europe | North America | Latin America

+1–418–767–0111

info@ruggedmonitoring.com www.ruggedmonitoring.com